INSTALLATION INSTRUCTIONS

Razor® with Winter® Carbide Cutting Edge System

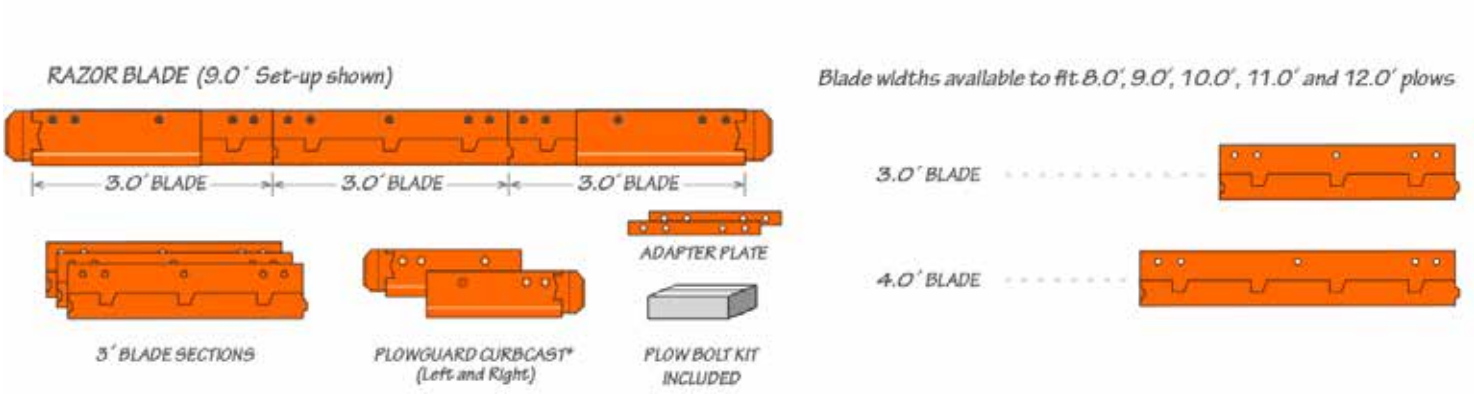

IMPORTANT!

The moldboard mounting surface must be clean of all foreign material prior to installing new blades and hardware to avoid issues with bolt loosening while in service.

- For torque recommendation, please refer to SAE J1701
- Re-torque hardware after the first 10 plow hours

Step 1

Install driver's-side main cutting edge with included shorter 3" plow bolts. Hand tighten. Do not install bolts in the three bolt holes on the end. These three holes will be used for plow guard installation.

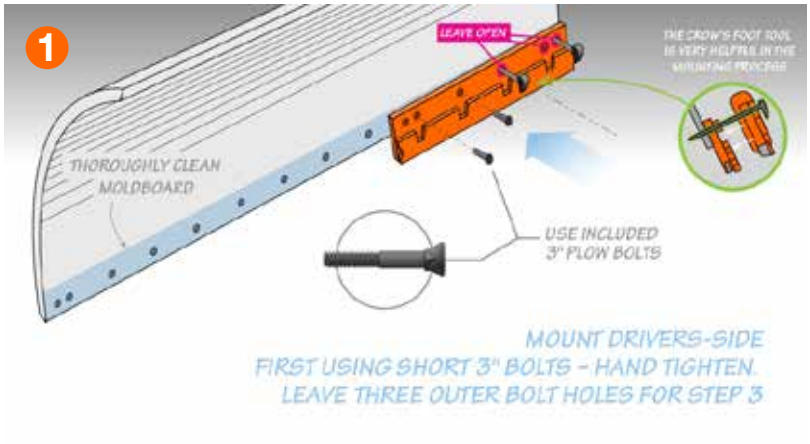

Step 2

Install center and passengers-side sections with included shorter 3" plow bolts by first pressing blade firmly against moldboard, then slide blade behind the adjacent blade so they interlock.

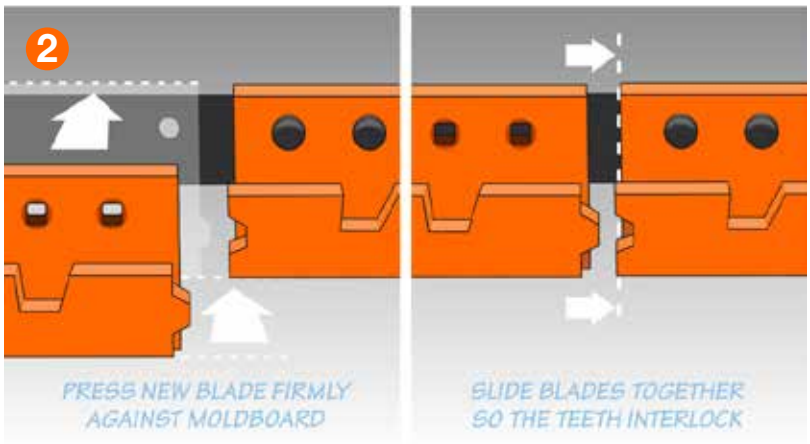

Step 3

Install passengers-side edge with included 3" plow bolts. Hand tighten. Do not install bolts in the three bolt holes on the end. These three holes will be used for plow guard installation.

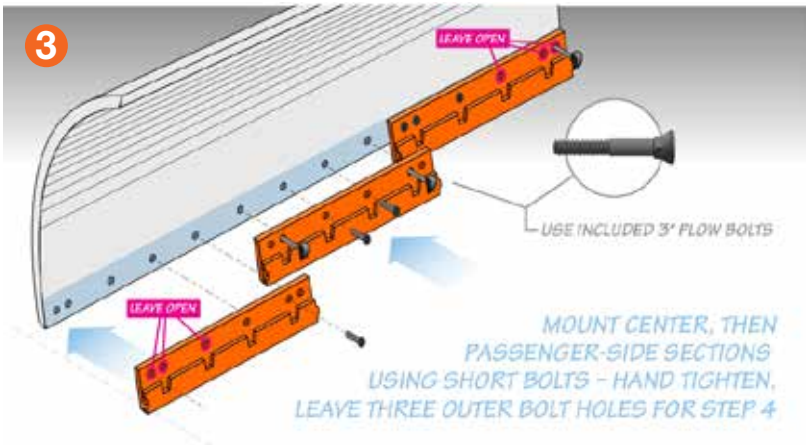

Step 4

Install an adapter plate and a PlowGuard CurbCast® plow guard on each end with included 3.5" plow bolts. Hand tighten.

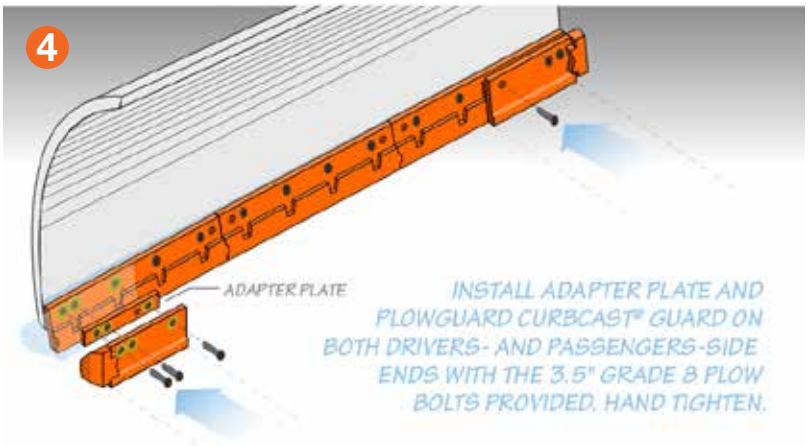

Step 5

Set entire assembly on ground to ensure it's level.

Fully tighten all bolts. For torque specification, please refer to SAE J1701.

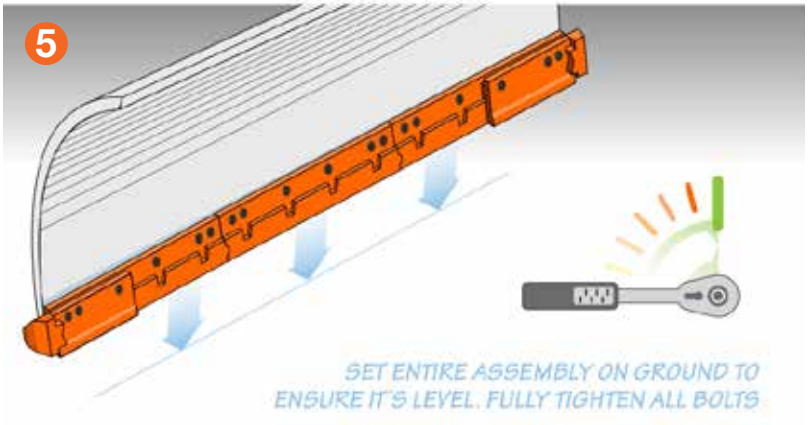

Re-torque hardware after the first 10 plow hours

WARNING!

Enclosed hardware package must be utilized or the WARRANTY is invalid