INSTALLATION INSTRUCTIONS

Scarifier Board System 2500

A COMPLETE SCARIFIER BOARD SYSTEM (12.0' Set-up shown)



Board widths available:

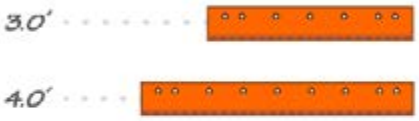

PARTS REQUIRED TO CREATE A FULL SYSTEM:



SCARIFIER BOARD SECTIONS

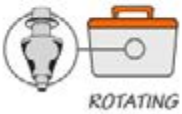

ROTATING BITS KIT

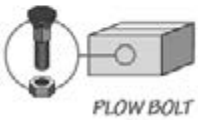

PLOW BOLT KIT

IMPORTANT!

The moldboard mounting surface must be clean of all foreign material prior to installing new blades and hardware to avoid issues with bolt loosening while in service.

- For torque recommendation, please refer to SAE J1701
- Re-torque hardware after the first 10 plow hours

Step 1

Raise motor grader saddle to make the cutting edge easily accessible. Clear moldboard of all foreign material before mounting scarifier board sections.

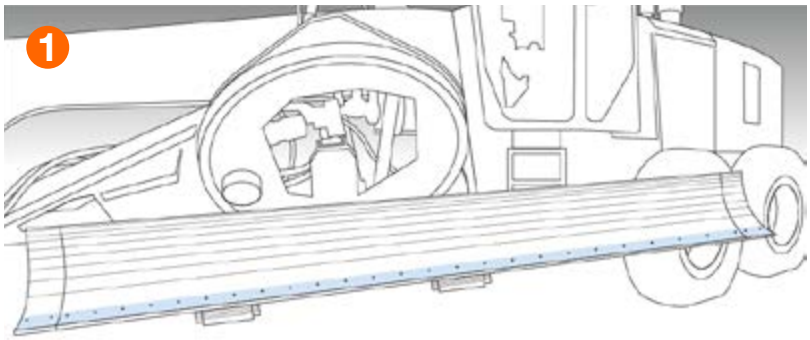

RAISE THE SADDLE TO MAKE THE CUTTING EDGE EASILY ACCESSIBLE. CLEAN MOLDBOARD SURFACES THOROUGHLY.

Step 2

Install scarifier boards to the moldboard with the plow bolts in the provided mounting hardware kit. Tighten to specifications.

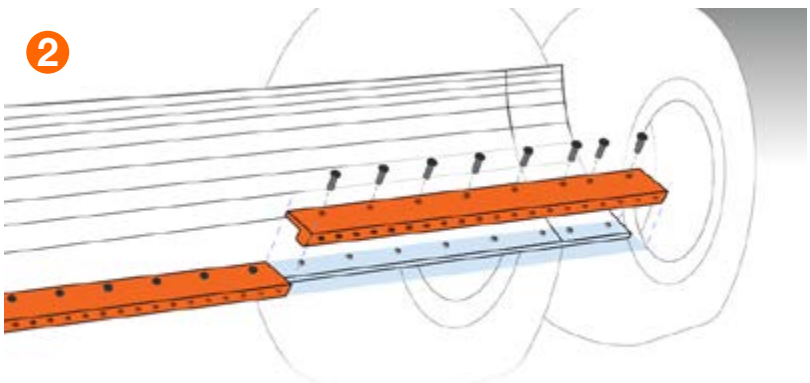

MOUNT EACH SCARIFIER BOARD TO THE MOLDBOARD & TIGHTEN

Step 3

Use a soft hammer or mallet to set the rotating bits into the mounting holes through the underside of the scarifier board. Avoid using a hard surface hammer on the bits, as that could damage the carbide hardfacing.

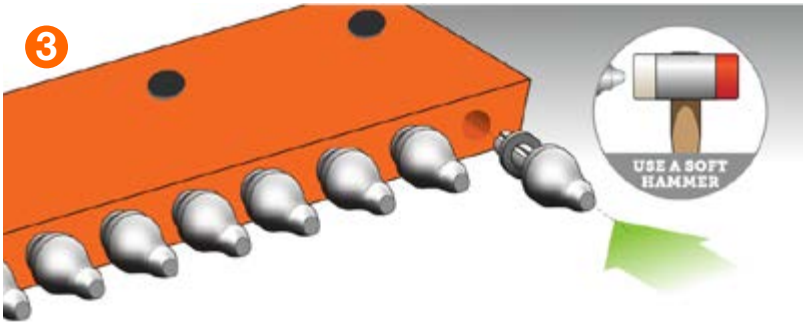

USE A SOFT HAMMER TO SET THE BITS INTO THE MOUNTING HOLES – A HARD SURFACE HAMMER COULD DAMAGE THE BIT'S HARDFACING

Step 4

It is recommended to inspect the rotating bits often to ensure that they are freely rotating. Clean the bits and mounting holes regularly with compressed air to remove grit and dust that may build up. If the bits cannot rotate, remove them with a punch to clean them thoroughly.

*DO NOT use liquid lubricant or oil for lubrication, as this will attract and trap dirt. If lubrication is desired, try a spray-on dry graphite lubricant.



CLEAN YOUR ROTATING BITS OFTEN WITH COMPRESSED AIR TO REMOVE GRIT & DUST. THEY MUST SPIN FREELY FOR BEST PERFORMANCE & LONG LIFE.

Re-torque hardware after the first 10 plow hours

WARNING!

Enclosed hardware package must be utilized or the WARRANTY is invalid