INSTALLATION INSTRUCTIONS

MŌDUS® Modular Shoe System for Arctic® LD Snow Pushers

PARTS INCLUDED [LD 7-HOLE MOUNTING]

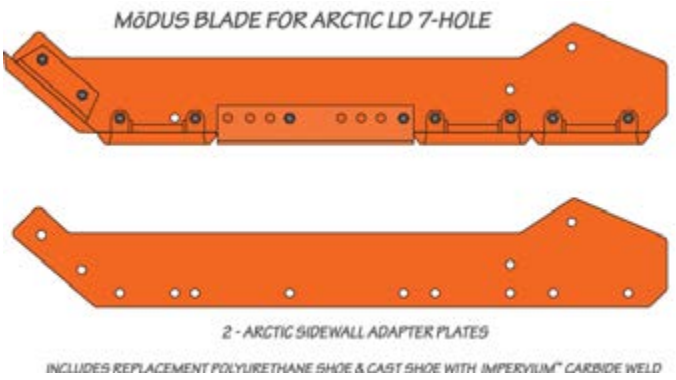

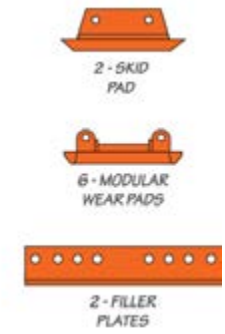

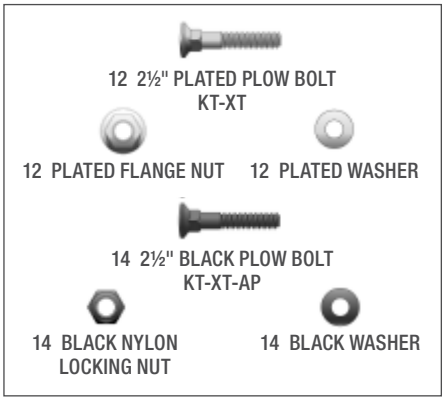

BOLT KIT INCLUDES

IMPORTANT!

The moldboard mounting surface must be clean of all foreign material prior to installing new blades and hardware to avoid issues with bolt loosening while in service.

- For torque recommendation, please refer to SAE J1701
- Re-torque hardware after the first 10 plow hours

Step 1

Using supplied coated hardware (part #KT-XT Pusher Box Shoe) insert plow bolts into countersunk side of sidewall adapter (**1**). Using the nuts and washers from the same kit, fasten the modular wear pads hand tight to outside of sidewall adapter (**2**).

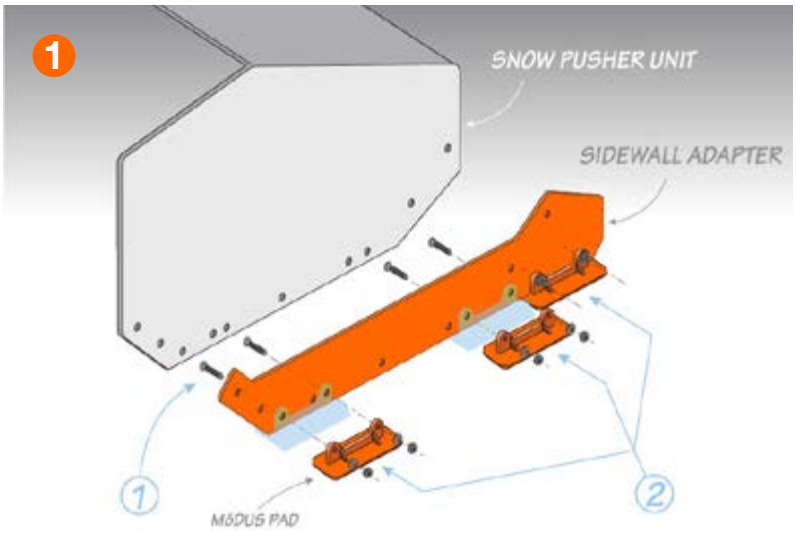

FOR EACH ADAPTER PLATE THIS STEP USES: 6 2½" PLATED PLOW BOLT 6 PLATED FLANGE NUT 6 PLATED WASHER

Step 2

Using supplied black plow bolts (part #KT-XT-AP), washers, and nuts, install only the three bolts shown through adapter plate and sidewall of snow pusher unit. Hand tighten fasteners.

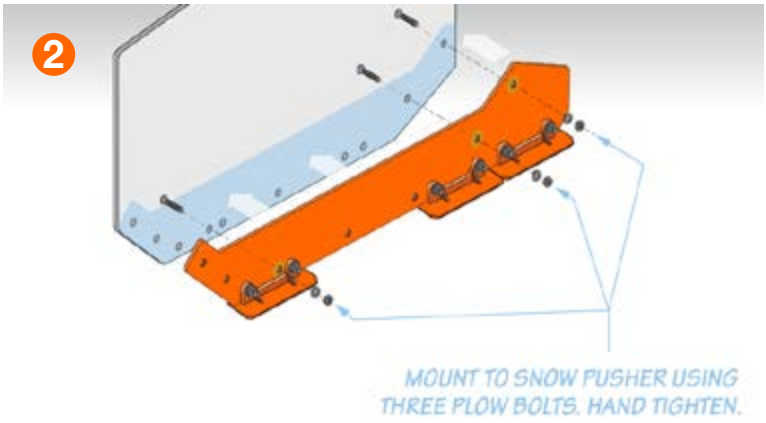

FOR EACH ADAPTER PLATE THIS STEP USES: 3 2½" BLACK PLOW BOLT 3 BLACK HEX NUT 3 BLACK WASHER

Step 3

Mount front skid pad to outside of front angled section of adapter plate using black plow bolts, washers, and nuts; hand tighten fasteners. Install center filler plate in same fashion. Fully tighten all hardware from steps two and three.

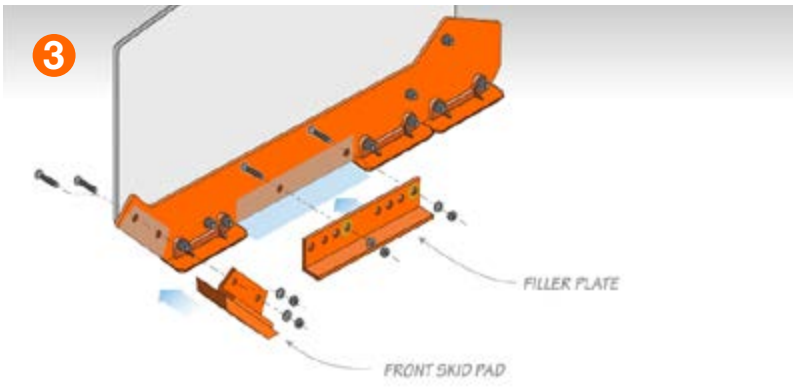

FOR EACH ADAPTER PLATE THIS STEP USES: 4 2½" BLACK PLOW BOLT 4 BLACK HEX NUT 4 BLACK WASHER

Step 4

Set snow pusher on ground and ensure box is parallel to the surface it is sitting on. Then tighten all Winter hardware. This ensures even wear on all wear pads.

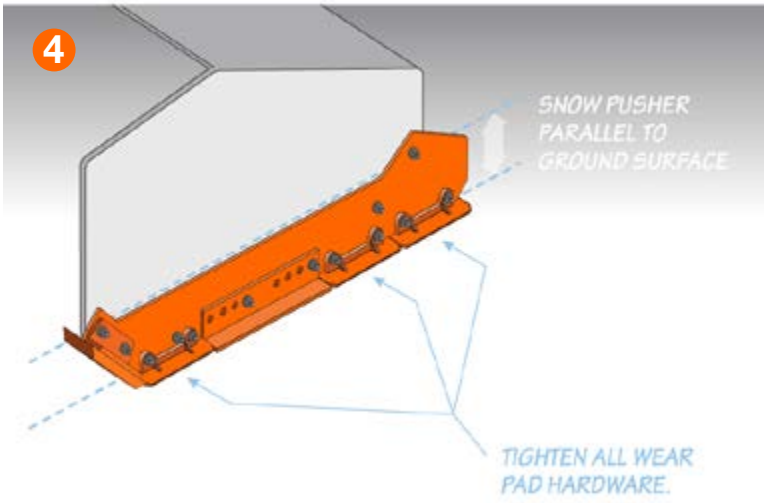

Re-torque hardware after the first 10 plow hours

WARNING!

Enclosed hardware package must be utilized or the WARRANTY is invalid