INSTALLATION INSTRUCTIONS

Razor® Arrow

PARTS INCLUDED

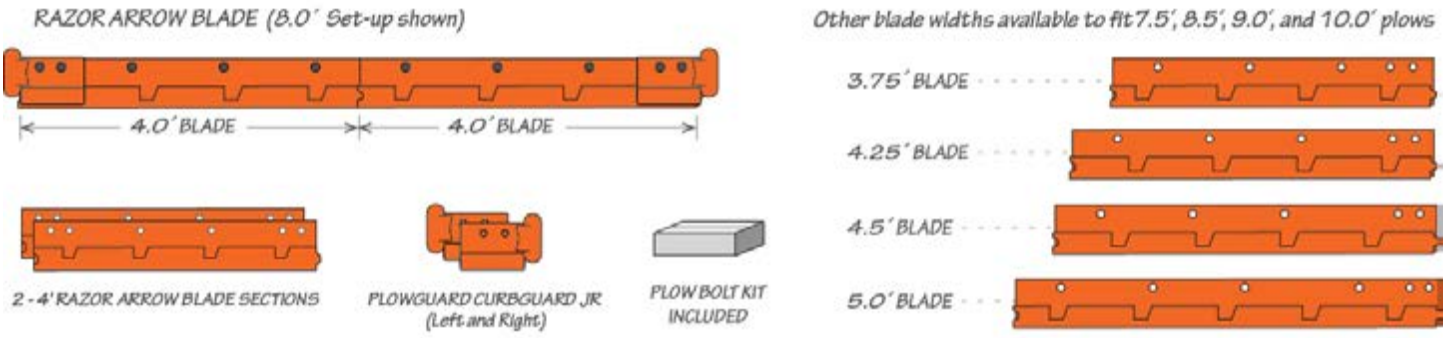

IMPORTANT!

The moldboard mounting surface must be clean of all foreign material prior to installing new blades and hardware to avoid issues with bolt loosening while in service.

- For torque recommendation, please refer to SAE J1701
- Re-torque hardware after the first 10 plow hours

Step 1

Install drivers side main cutting edge with included shorter plow bolts. Hand tighten. Do not install bolts in drivers-side two bolt holes on the end. These two holes will be used after plow guard installation.

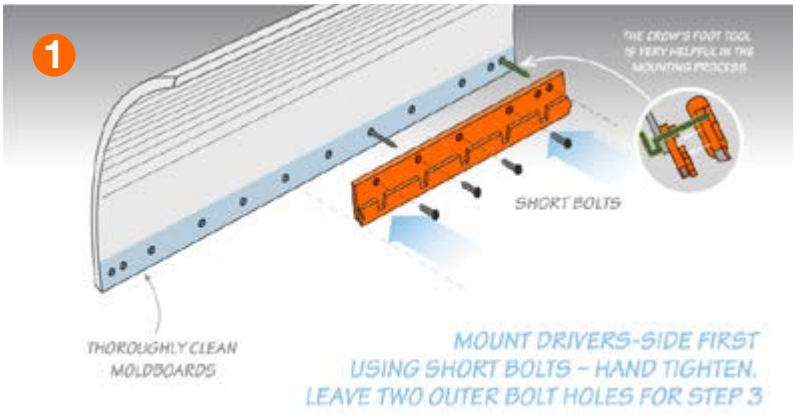

Step 2

Install passengers-side main edge with included shorter plow bolts, making sure it interlocks with driver's side. Hand tighten. Do not install bolts in drivers side two bolt holes on the end. These two holes will be used after plow guard installation.

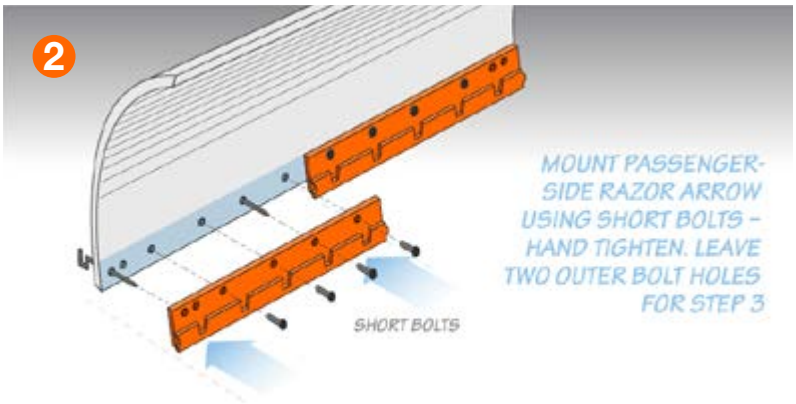

Step 3

Install both PlowGuard Jr.'s on drivers- and passengers-side ends with included longer plow bolts. Hand tighten.

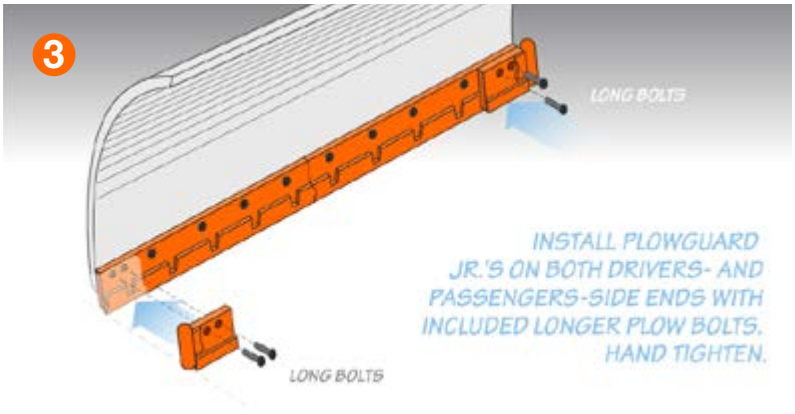

Step 4

Set entire assembly on ground to ensure it's level.

Fully tighten all bolts. For torque specification, please refer to SAE J1701.

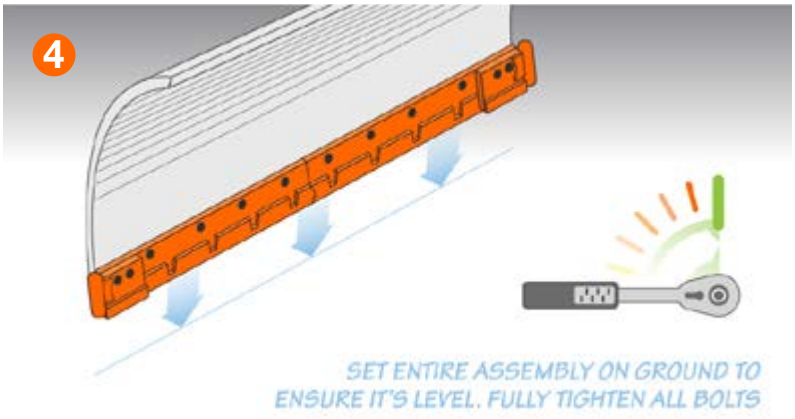

Re-torque hardware after the first 10 plow hours

WARNING!

Enclosed hardware package must be utilized or the WARRANTY is invalid