INSTALLATION INSTRUCTIONS

# Victory® Cutting Edge System

## PARTS INCLUDED

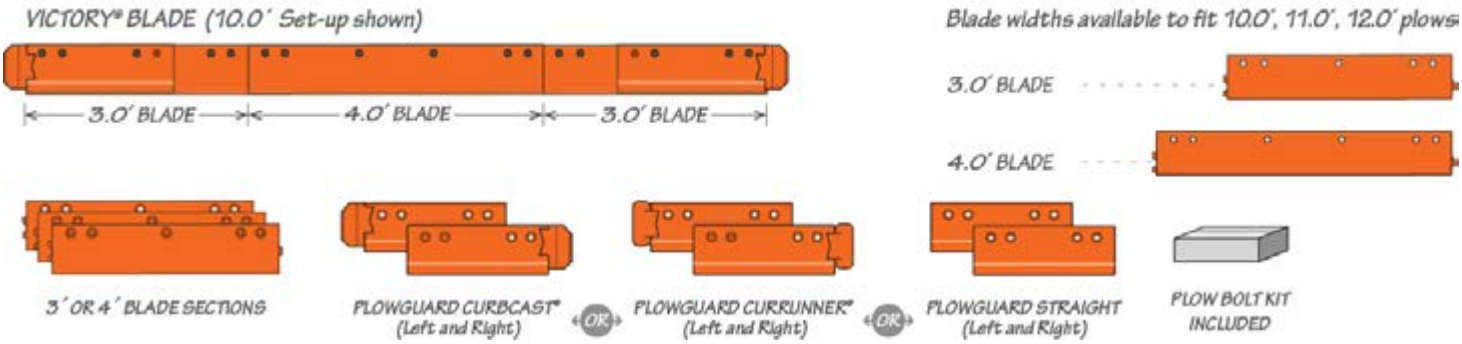


**IMPORTANT!**

The moldboard mounting surface must be clean of all foreign material prior to installing new blades and hardware to avoid issues with bolt loosening while in service.

- For torque recommendation, please refer to SAE J1701
- Re-torque hardware after the first 10 plow hours

## Step 1

Install driver's-side main cutting edge with included 3" Grade 8 plow bolts. Hand tighten. Do not install bolts in the three bolt holes on the end. These three holes will be used for plow guard installation.

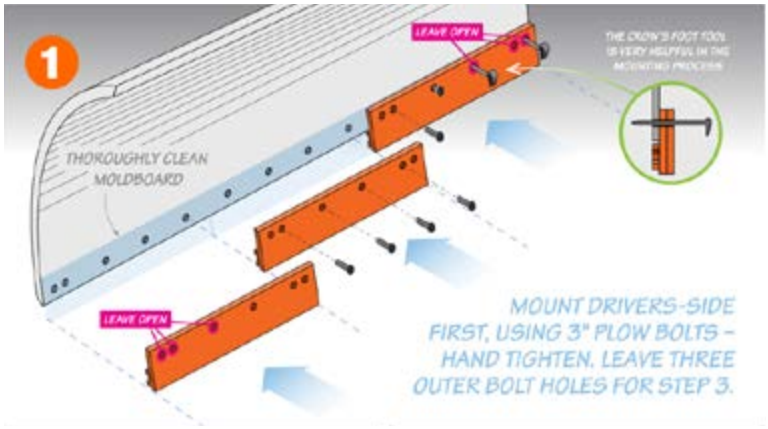


## Step 2

Install center and passengers-side sections by first pressing blade firmly against moldboard, then slide blade behind the adjacent blade so they interlock.

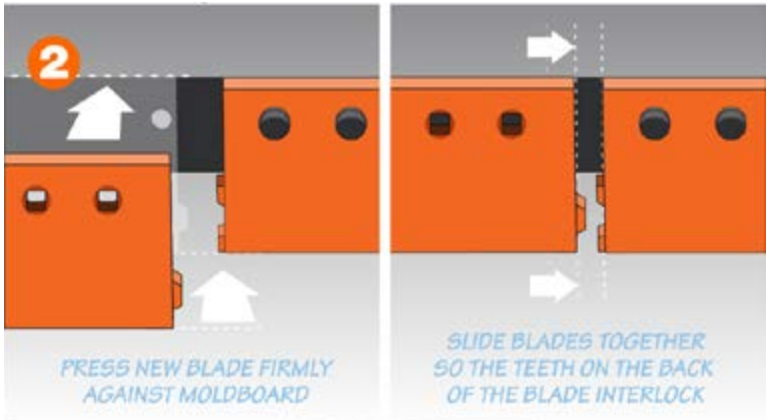

## Step 3

Install a plow guard on each end with included 4" Grade 8 plow bolts. Hand tighten.

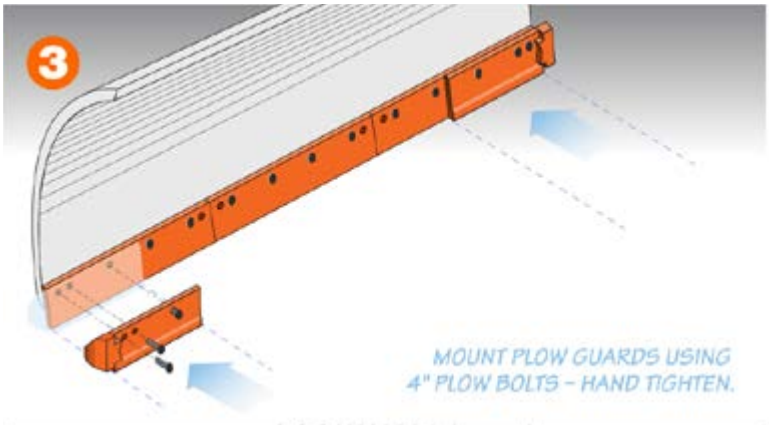


## Step 4

Set entire assembly on ground to ensure it's level.

Fully tighten all bolts. For torque specification, please refer to SAE J1701.




Re-torque hardware after the first 10 plow hours

**WARNING!**

**Enclosed hardware package must be utilized or the WARRANTY is invalid**