INSTALLATION INSTRUCTIONS

Pegasus® Expandable Plow Cutting Edge System

PARTS INCLUDED [CARBIDE/RUBBER]

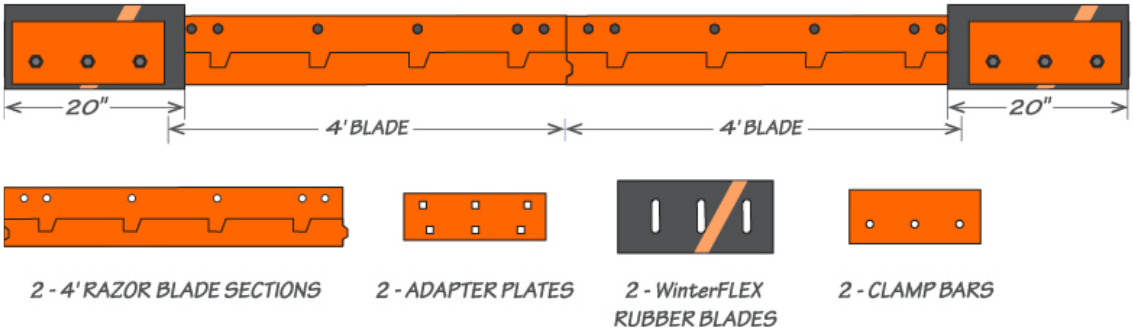

2 - 4' RAZOR BLADE SECTIONS

2 - ADAPTER PLATES

2 - WinterFLEX RUBBER BLADES

2 - CLAMP BARS



18 CARRIAGE BOLT



6 PLOW BOLT



24 HEX NUT

BOLT KIT INCLUDES

IMPORTANT!

The moldboard mounting surface must be clean of all foreign material prior to installing new blades and hardware to avoid issues with bolt loosening while in service.

- For torque recommendation, please refer to SAE J1701
- Re-torque hardware after the first 10 plow hours

Step 1

1. Remove both wing edges.
    a. Remove stop bolts between plow and wing
    b. Extend wings all the way out to access the inside bolt.
2. Remove factory center cutting edge.

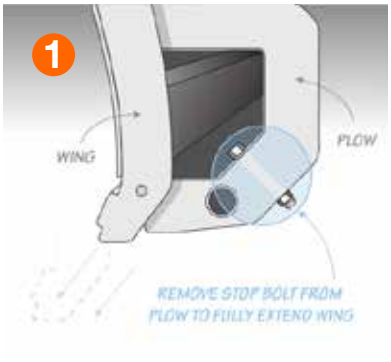

Step 2

Clear moldboard of all foreign material before mounting blade sections with provided mounting hardware kit. Install the Razor cutting edge using ⅝" x 2½" carriage bolts and hex head nut. (Install on the driver's side first to accommodate the patented interlocking blade design); repeat these steps for passenger's side.

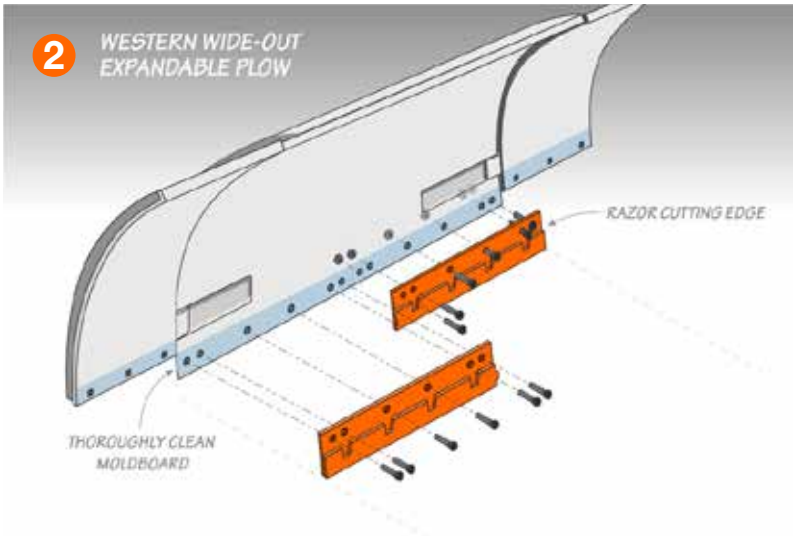

THIS STEP USES: 12 2½" CARRIAGE BOLT 12 HEX NUT

Step 3

Install the Wing Adapter Plate on both left and right wings using 5/8" x 2½" carriage bolts and hex head nut.

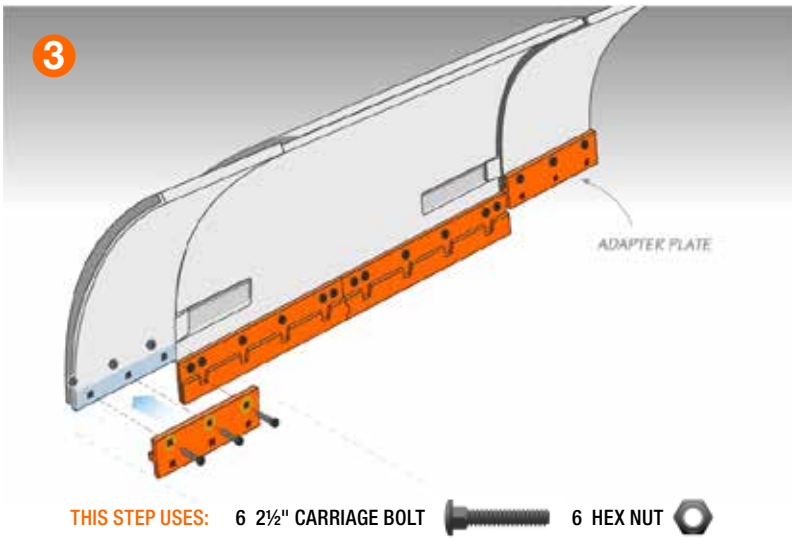

Step 4

Insert plow bolts through the back side of adapter plate to mount WinterFlex Blade & Clamp Bar *(*position longer end of rubber wing to inside of plow)*.

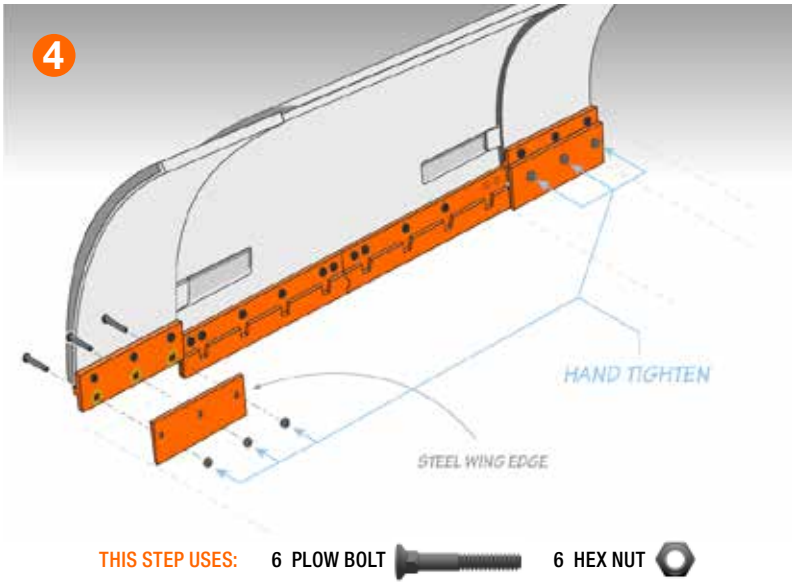

Step 5

Hand tighten bolts over clamp bar & WinterFlex Rubber Edge. Lower plow to ground, applying small amount of down pressure to ensure blade is fully touching the ground – then fully tighten all bolts.

Re-torque hardware after the first 10 plow hours

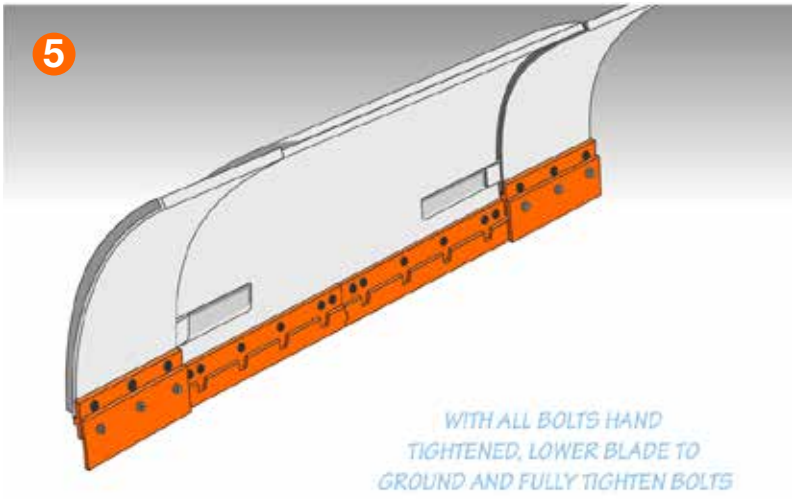

WARNING!
Enclosed hardware package must be utilized or the WARRANTY is invalid