INSTALLATION INSTRUCTIONS

MŌDUS® Modular Shoe System for Pro-Tech 36"

PARTS INCLUDED

FULLY ASSEMBLED MŌDUS BLADE FOR PRO-TECH 36" SNOW PUSHER

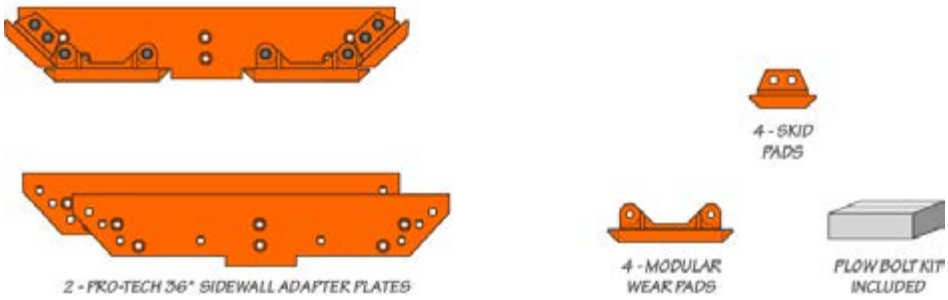

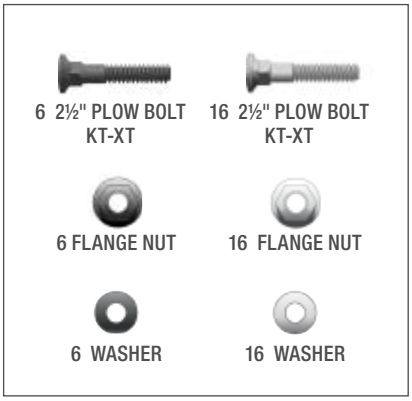

BOLT KITS INCLUDE

IMPORTANT!

The moldboard mounting surface must be clean of all foreign material prior to installing new blades and hardware to avoid issues with bolt loosening while in service.

- For torque recommendation, please refer to SAE J1701
- Re-torque hardware after the first 10 plow hours

Step 1

Insert dichromate (silver) Plow Bolts into inside face of sidewall adapter (**A**), then mount adapter plate to wall of the pusher box using black Plow Bolts (**B**) from supplied #KT-XT Bolt Kit. Tighten adapter plate bolts with impact driver.

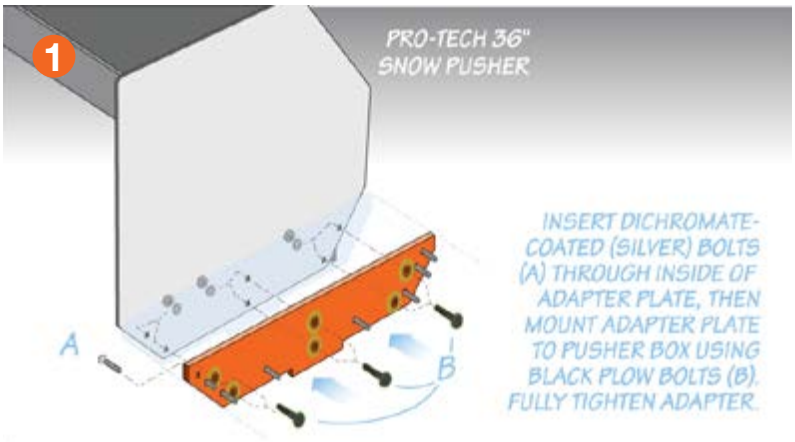

Step 2

Using supplied dichromate (silver) washers and nuts, mount the two Modular Wear Pads to the adapter plate. Hand tighten fasteners.

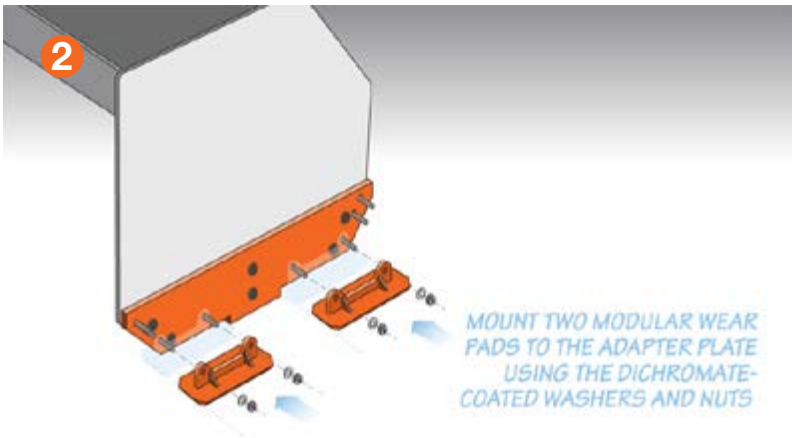

Step 3

Mount Skid Pad to front angled section of Adapter Plate, and the other Skid Pad to the rear angled section with dichromate (silver) washers and nuts; hand tighten fasteners.

Note the end of the Skid Pads rest on top of the Wear Pads.

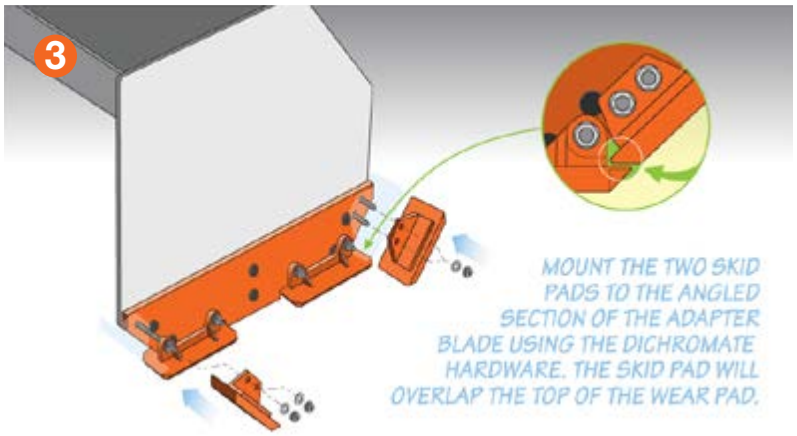

Step 4

Set snow pusher on the ground ensuring the box is parallel to the surface it is sitting on. Then tighten all hardware. This ensures even wear on all shoes as well as ensuring the system is completely parallel to the ground.

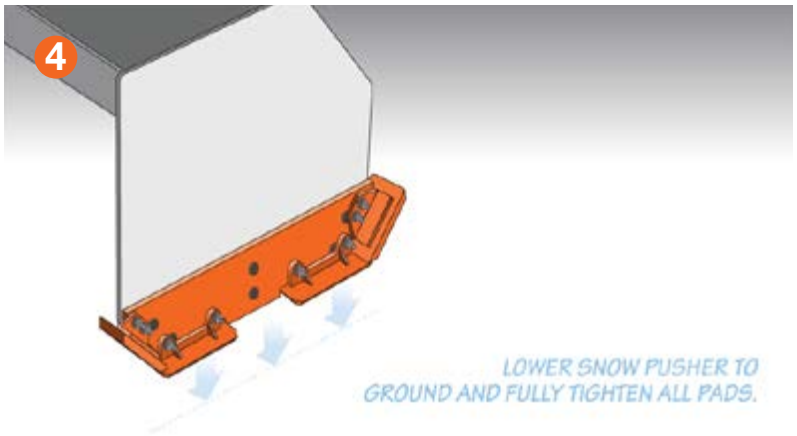

Re-torque hardware after the first 10 plow hours

WARNING!

Enclosed hardware package must be utilized or the WARRANTY is invalid