INSTALLATION INSTRUCTIONS

MōDUS® Modular Shoe System for Arctic® HD Snow Pushers

PARTS INCLUDED

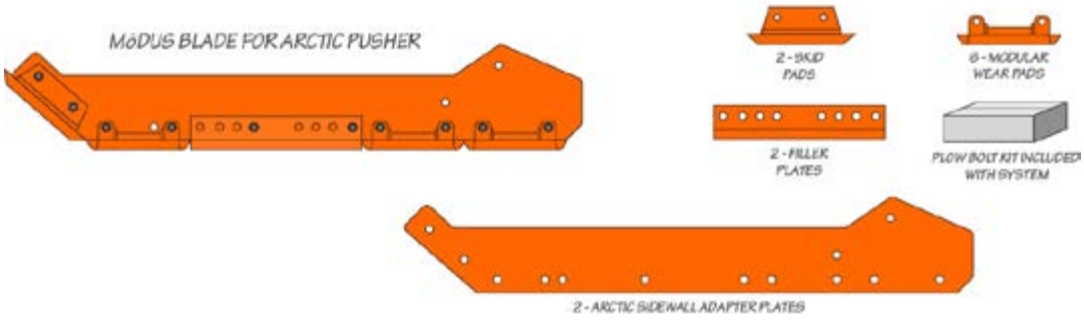

IMPORTANT!

The moldboard mounting surface must be clean of all foreign material prior to installing new blades and hardware to avoid issues with bolt loosening while in service.

- For torque recommendation, please refer to SAE J1701
- Re-torque hardware after the first 10 plow hours

Step 1

Using supplied coated hardware (#KT-XT Plow Bolt Kit) insert plow bolts into countersunk holes on inside of sidewall adapter, facing out. Fasten the modular wear pads to outside of sidewall adapter with included washers and nuts. Hand tighten.

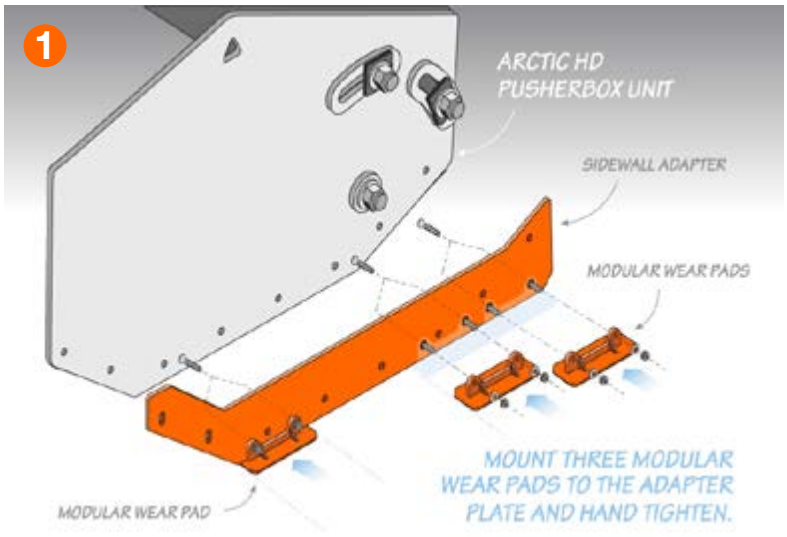

Step 2

Using four supplied plow bolts (plow bolt kit #KT-XT-AP), fasten adapter plate to sidewall of snow pusher unit. Hand tighten.

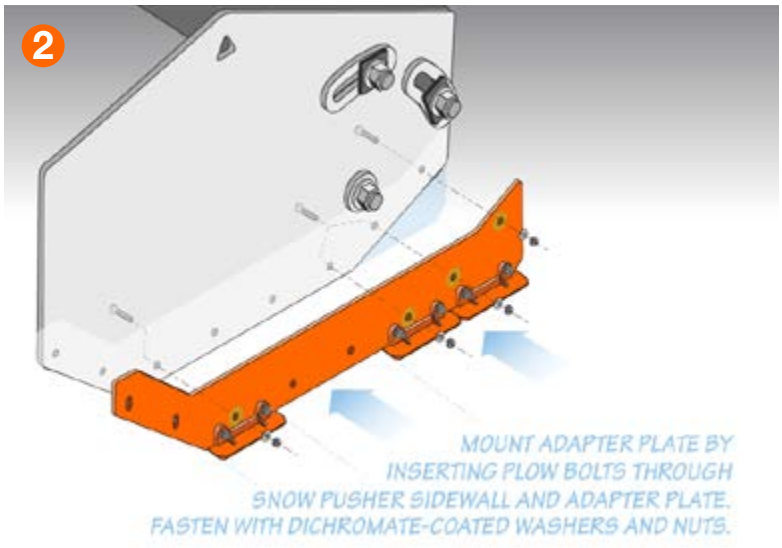

Step 3

Using same hardware and installation as Step 2, insert plow bolts through snow pusher sidewall and adapter plate to mount the front skid shoe (position skid pad on front angled section of adapter plate). Install center filler plate in between the modular wear pads. Hand tighten fasteners.

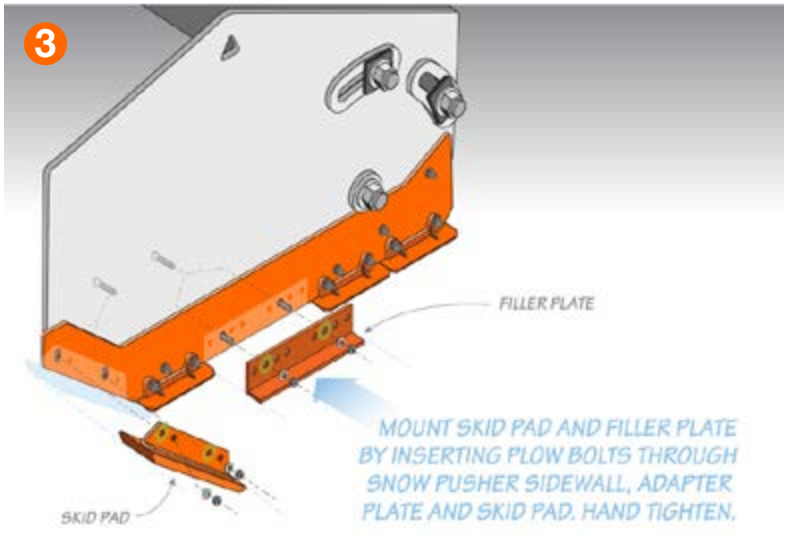

Step 4

Set snow pusher on ground and ensure box is parallel to the surface it is sitting on. Then tighten all wear pad hardware. This ensures even wear on all shoes as well as ensuring complete contact of the system.

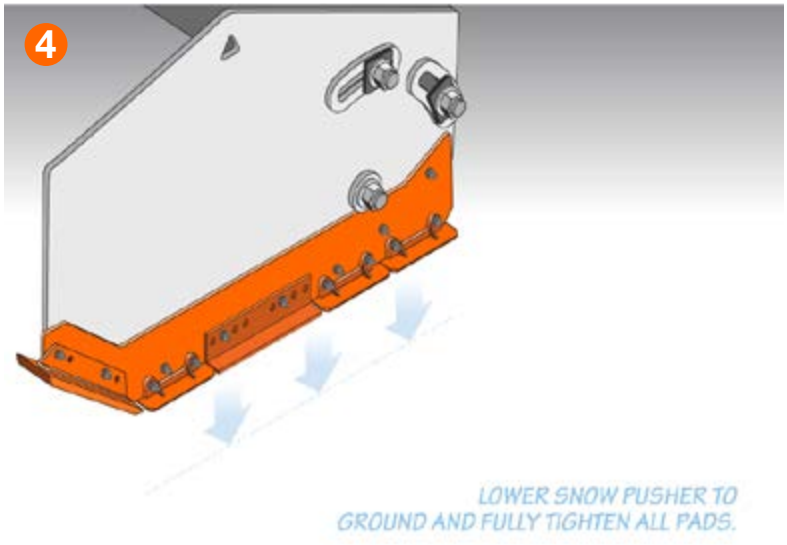

Re-torque hardware after the first 10 plow hours

WARNING!

Enclosed hardware package must be utilized or the WARRANTY is invalid